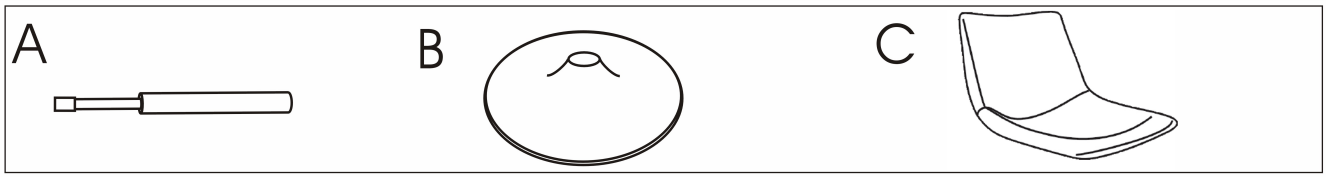
A
B
C

D
E
X4
F

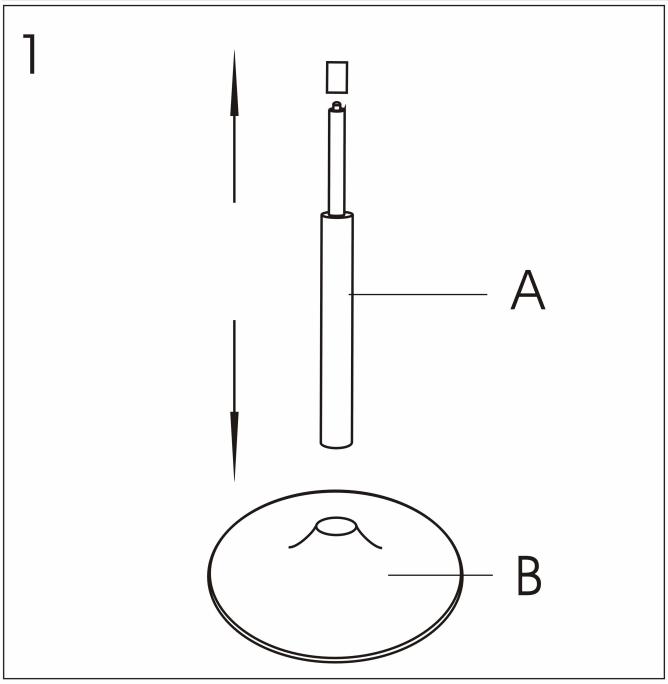
1
A
B

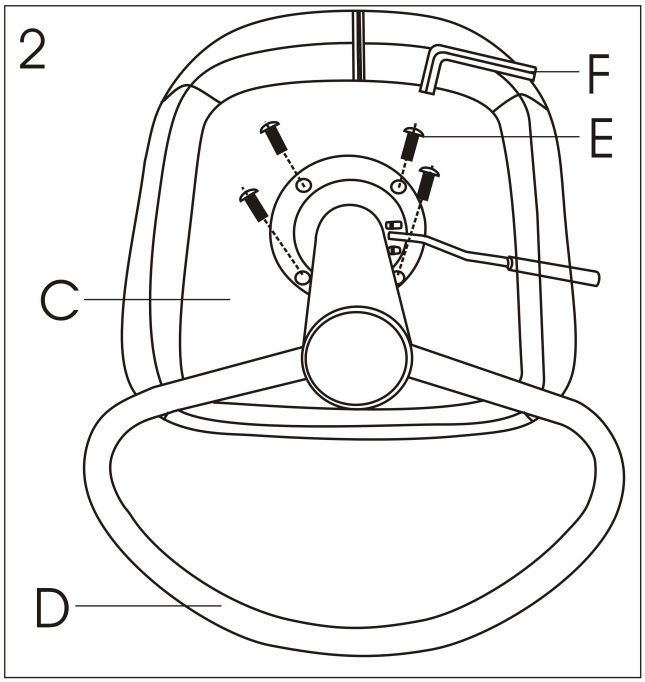
2
F
E
C
D

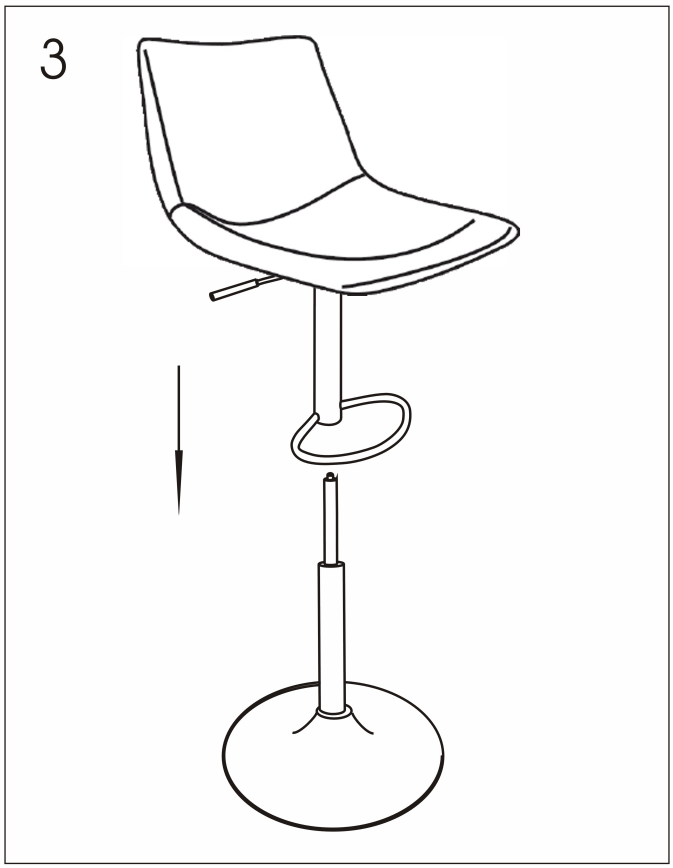
3

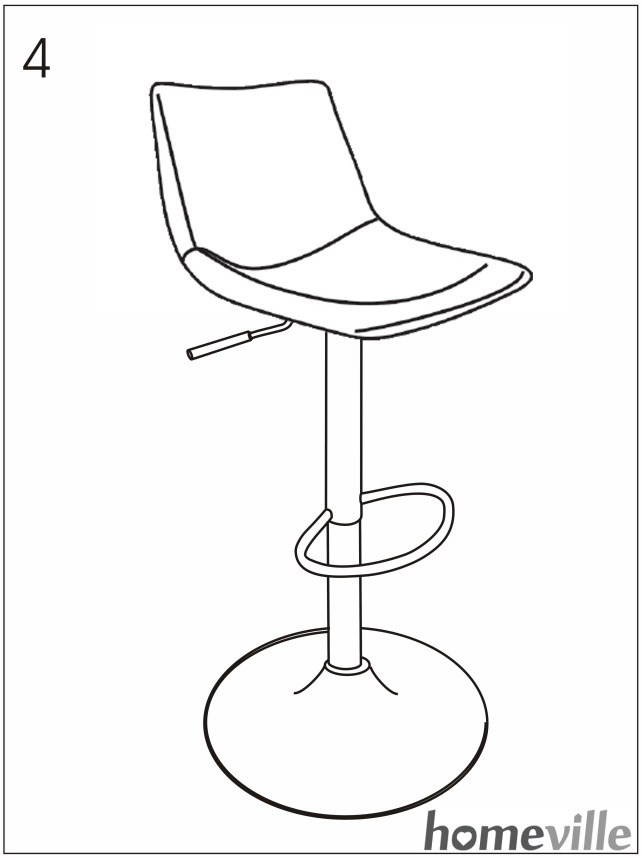
4
homeville