homeville

A X1	B X1	C X1
D X1	E X1	F X1
G X4		

1

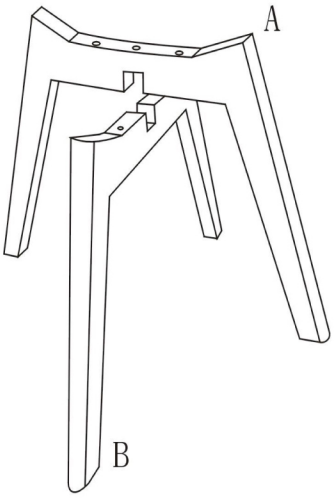

2

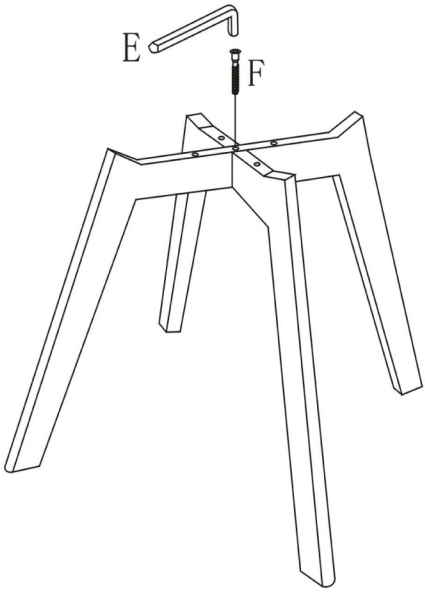
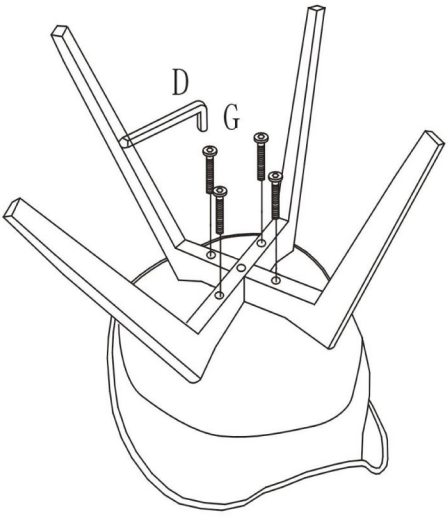
3